ACU20FD Hign Accuracy
Mass Flow Controller/Flowmeter

Introduction

ACCU(Beijing Accu Flow Technology Co.,Ltd.) specializes in manufacturing gas/liquid mass flow meters and controllers. The instruments are designed according to the actual working conditions and demands of customers, and are widely used in various occasions such as industrial process control, gas and liquid analysis, and flow measurement.

It plays an important role in scientific research and production in various fields such as semiconductor and integrated circuit industry, special materials discipline, chemical industry, petroleum industry, medicine, environmental protection, and vacuum. Its typical applications include: electronic process equipment, such as diffusion, epitaxy, CVD, oxidation, plasma etching, sputtering, ion implantation; And coating equipment, fiber optic melting, micro reaction equipment, mixed gas distribution system, capillary measurement, meteorological chromatograph, and otheranalytical instruments.



（▲ACU20FD-L）

Performance and Principle

ACU20FD is a high-precision series of flow meters/controllers, with a measurement error of only ± 0.5% of full scale. The outstanding accuracy of this series comes from a unique sensor probe. This probe consists of two sensing elements - a speed sensor and a temperature sensor, which can automatically correct the effects of temperature and pressure changes. The instrument circuit heats the speed sensor to a constant value higher than the gas/liquid temperature, and then measures the cooling effect of the gas flow rate. Calculate the flow rate by measuring the principle that the electrical power consumed to maintain a constant temperature difference is proportional to the gas mass flow rate. Both sensors are standard grade platinum resistance temperature detectors (RTDs), sealed in 316 stainless steel packaging.

Applied to laboratories and industrial environments

The ACU20FC series high-precision differential pressure flow meter/controller has a measurement accuracy of ± 0.5%, which is sufficient to meet the needs of most customers. It can be used for various experiments in laboratories and complex industrial environments. In order to adapt tocomplex industrial environments, we also have somemodels that support IP67 dust and waterproof rating, as well as IICT4 intrinsic safety explosion-proof. In addition to the standard analog input/output interface, it also supports the 485/232 interface, and the communication protocol is the standard modbus RTU protocol.

Applications

vacuum	coating	solar energy
semiconductor	petroleum and petrochemical	
coal metallurgy		
gas production and distribution		
environment protection		various analyzers

Features

- Accuracy can reach ± 0.5% F.S
- Repeatability can reach ± 0.2% F.S
- Fast response speed and adjustment speed
- Fast response speed and adjustment speed
- Directly measuring mass flow rate
- Automatic temperature compensation
- Integrated PID controller to regulate flow rate
- The measured gas medium can be manually switched
- Thermal principle, fast response, high accuracy
- Tubular diversion, not easily blocked
- Suitable for various high and low pressure pipelines
- Short warm up time, small zero drift, and high reliability

Specifications

	High accuracy mass flow controller	High accuracy mass flow meter
Technical Specifications		
Range	2SCCM～6000SLM	2SCCM～6000SLM
Measurement and control range	controller valve control range 50:1	flow meter range ratio 100:1
Accuracy	±0.5%F.S（full scale）	
Linearity	±0.25%F.S	
Repeatability	±0.2%F.S	
Response time	<0.2s	<0.1s
Temperature coefficient	±0.025%F.S/℃	
Working temperature	0～50℃	
Warm up	30S is ok，5Min reach to the best condition	
Working pressure	working differential pressure: 0.1~0.5Mpa	working pressure drop：<0.01Mpa
Max. operating pressure	3MPa/10MPa	
Leakage rate	1×10^{-9} Pa m3/S	
	Mechanical parts	
Base material	stainless steel	
Connector	φ8，φ10，φ12， flange installation	
Sealing material	Vilton，Neoprene，NBR，metal	
Shell protection level	IP40	
Installation position	horizontal installation	
	Electrical properties	
Electrical connections	DB9孔, RJ11, 5.5×2.1 power fast plug	
Display status	with display，without display	
Digital output	RS232/485，MODBUS protocol，PROFIBUS protocol	
Analog output	0～5V、4-20mA、1～5V	
Power supply	24VDC、±15VDC	

Model No.& Ranges

Controller					
Models	ACU20FD-LC	ACU20FD-MC	ACU20FD-BC	ACU20FD-HC	ACU20FDR-BC
Ranges	2SCCM~30SLM	30SLM~300SLM	300SLM~3000SLM	3000SLM~5000SLM	1000SLM~3000SLM
Flow meter					
Model	ACU20FD-LM	ACU20FD-MM	ACU20FD-BM	ACU20FD-HM	ACU20FDR-HC
Ranges	2SCCM~30SLM	30SLM~300SLM	300SLM~3000SLM	3000SLM~5000SLM	4000SLM~6000SLM

Model chart

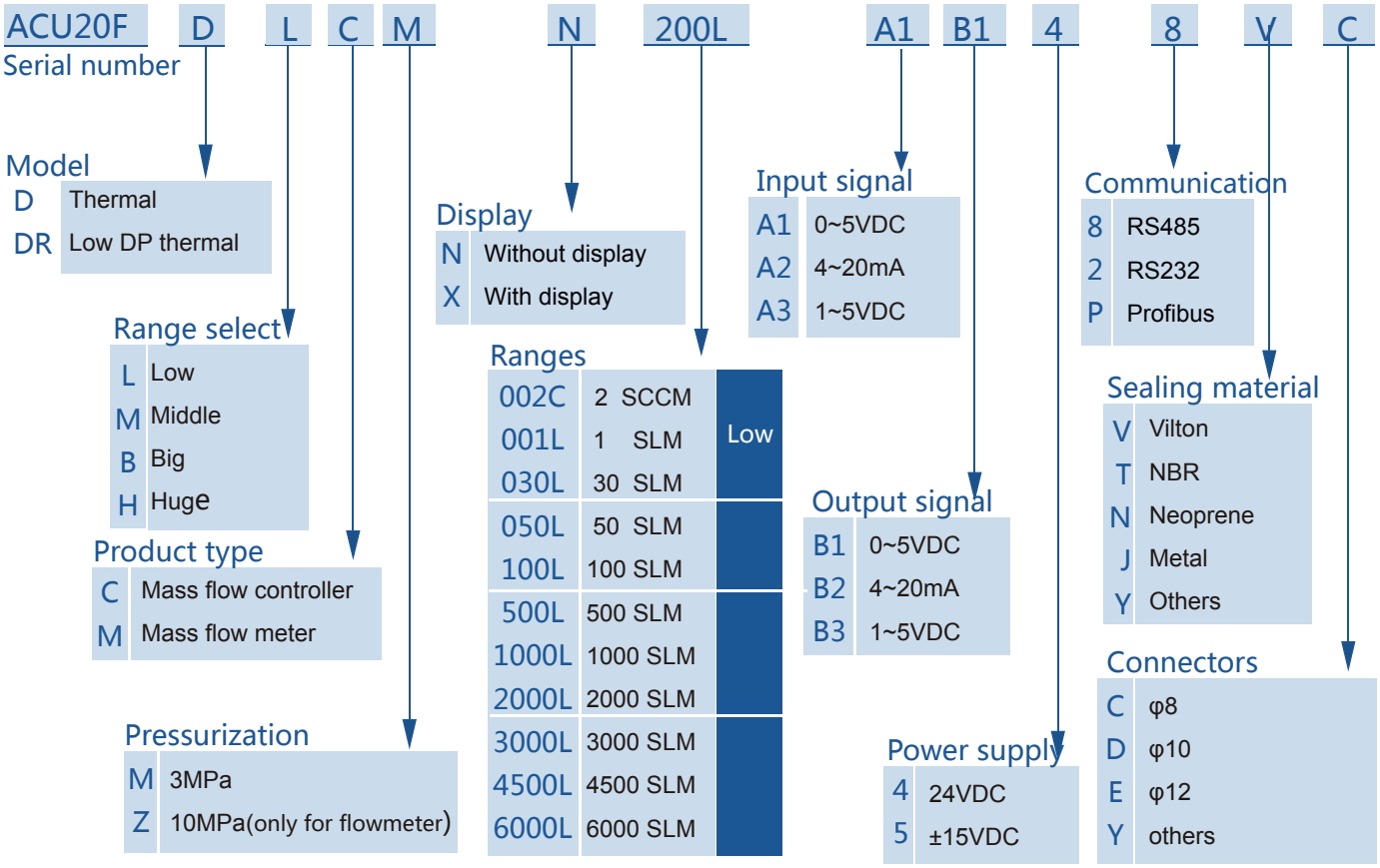

Instructions for using conversion coefficients

The mass flow controller and mass flow meter are generally calibrated with N2 when leaving the factory, In actual use, if it is other gases, the reading can be corrected if necessary by multiplying the flow rate displayed on the flow display instrument by the flow conversion coefficient. If it is a single component gas, its conversion coefficient can be found in our factory's product technical manual; If it is a multi-component gas (assuming it is composed of n gases), please calculate its conversion coefficient C according to the following formula:

Basic formula：$C=0.3106N/\rho\ (Cp)$

Wherein：ρ——the density of a gas in its standard state

Cp——the specific heat of a gas at constant pressure

N——the composition coefficient of gas molecules (related to the composition of the gas molecules, as shown in the table below)

Gas molecular composition	Example	N value
Monatomic molecule	Ar He	1.01
Diatomic molecule	CO N2	1.00
Triatomic molecule	CO2 NO2	0.94
polyatomic molecule	NH3 C4H8	0.88

For mixed gases：$N=N1\ (\omega1/\omega T)+N2\ (\omega2/\omega T)+\ldots+Nn\ (\omega n/\omega T)$

Wherein： ω1…ωn ——the flow rate of the corresponding gas

ωT ——the flow rate of the mixed gas

ρ1…ρn ——the density of the corresponding gas in the standard state(Values can be found in the gas conversion coefficient table)

Cp1…Cpn ——the specific heat of the corresponding gas at constant pressure(Values can be found in the gas conversion coefficient table)

N1…Nn ——the molecular composition coefficient of the corresponding gas, values can be found in the gas molecular composition coefficient table.

Description：1）standard state：pressure—101325Pa（760mmHg），temperature—273.15K（0℃）.

2）consult factory for the relevant parameters of gases not listed in the gas mass flow conversion coefficient table.

Dimensions (mm)

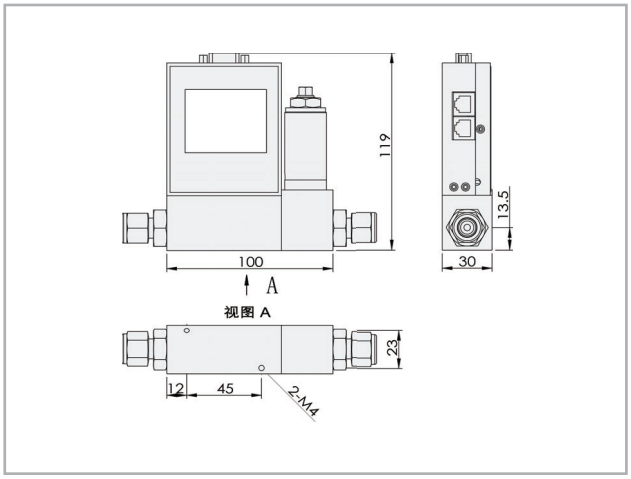

▲ACU20FD-LC mass flow controller (low range）

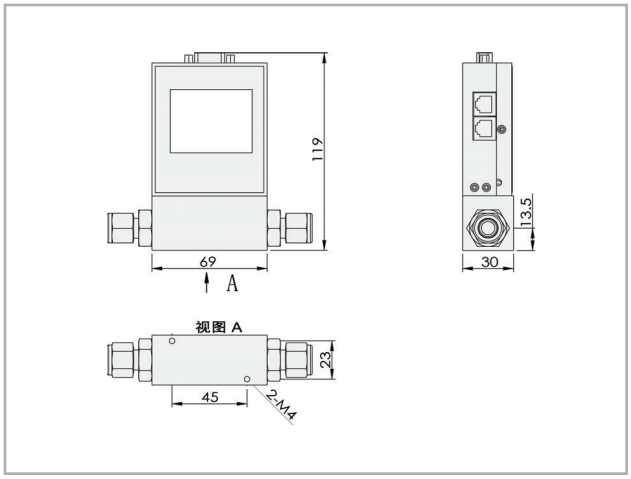

▲ACU20FD-LM mass flow meter（low range）

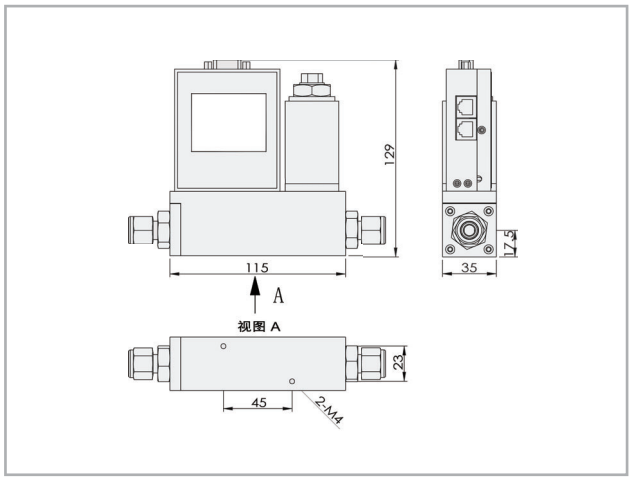

▲ACU20FD-MC mass flow controller (middle range）

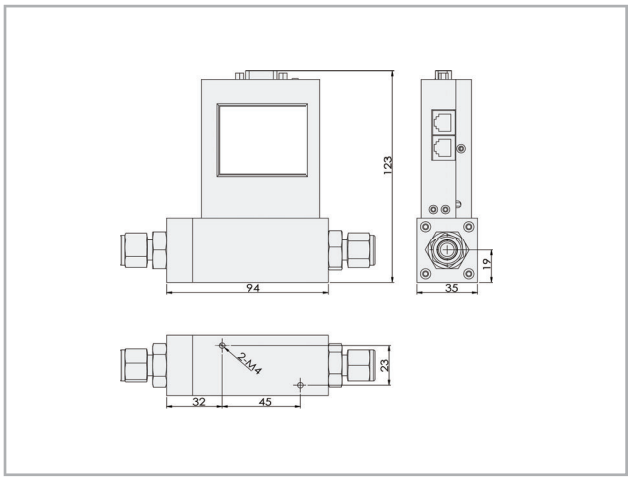

▲ACU20FD-MM mass flow meter（middle range）

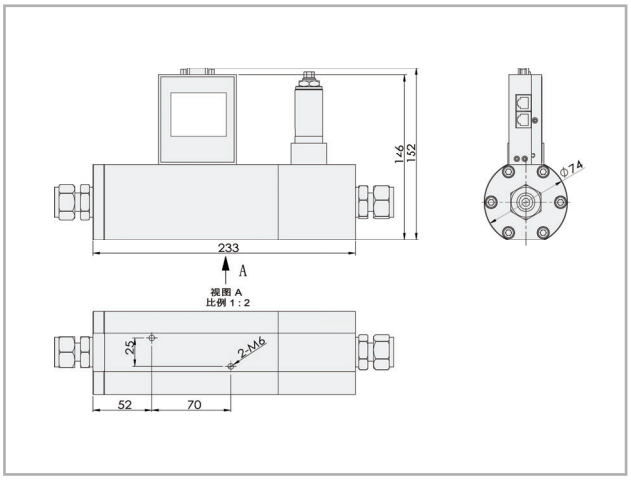

▲ACU20FD-BC mass flow controller (big range）

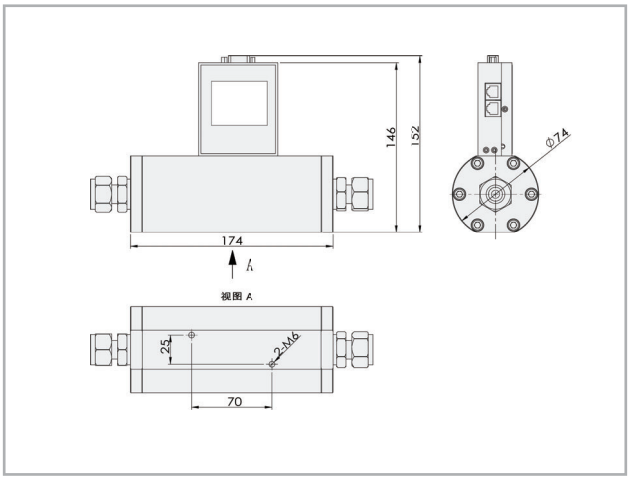

▲ACU20FD-BM mass flow meter（big range）

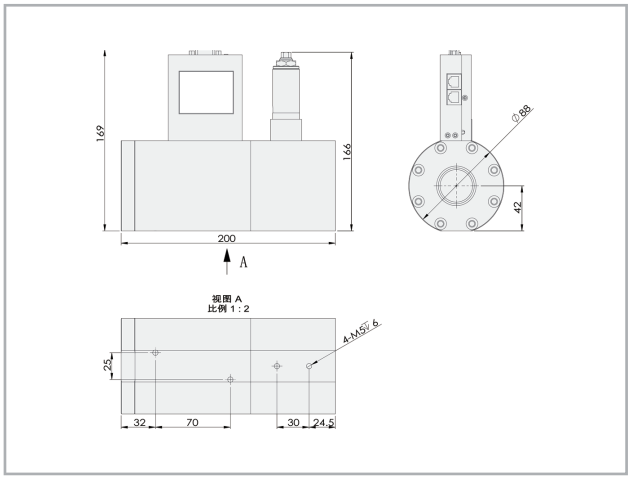

▲ACU20FD-HC mass flow controller (huge range）

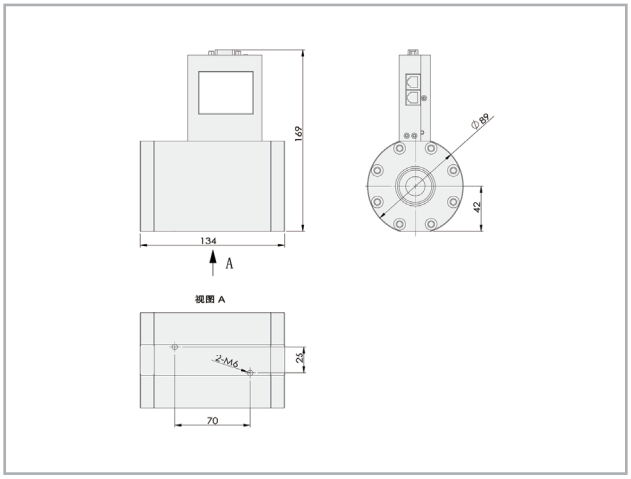

▲ACU20FD-HM mass flow meter（huge range）

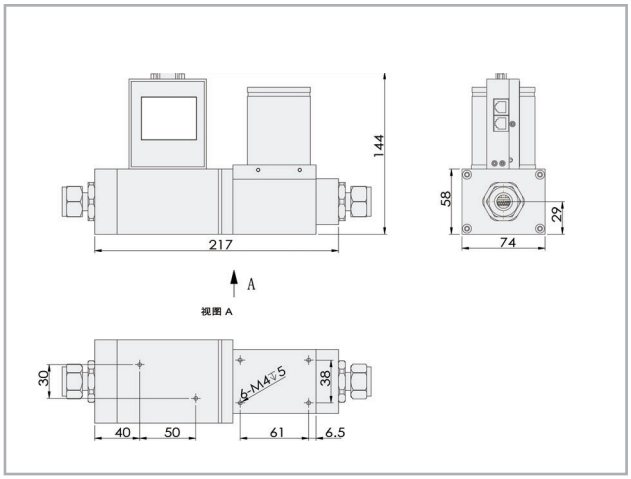

▲ACU20FDR-BC mass flow controller (big range）

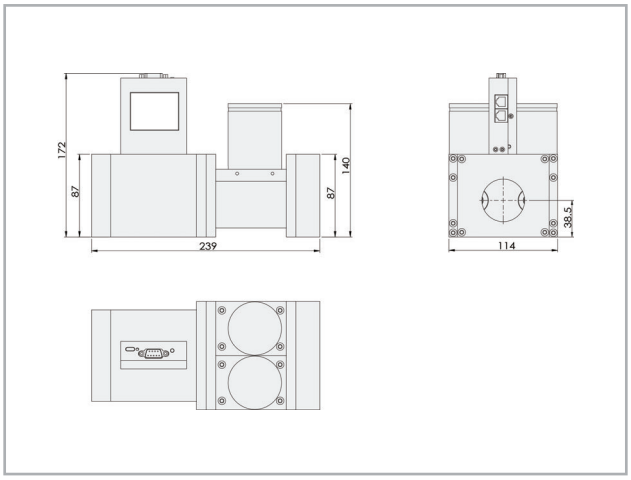

▲ACU20FDR-HC Dual valve mass flow controller (huge range）

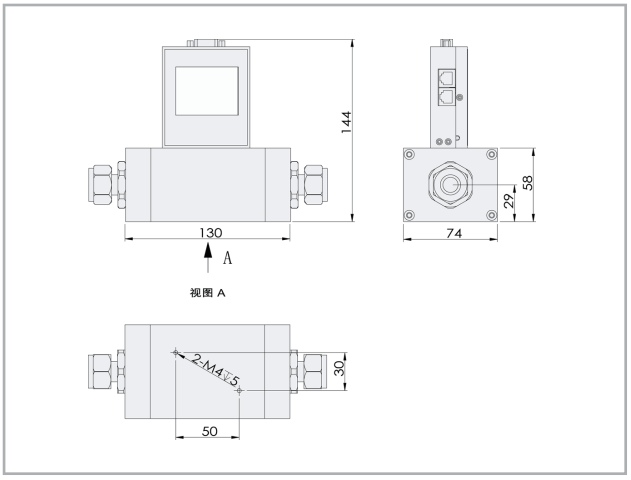

▲ACU20FDR-BM mass flow meter（big range）

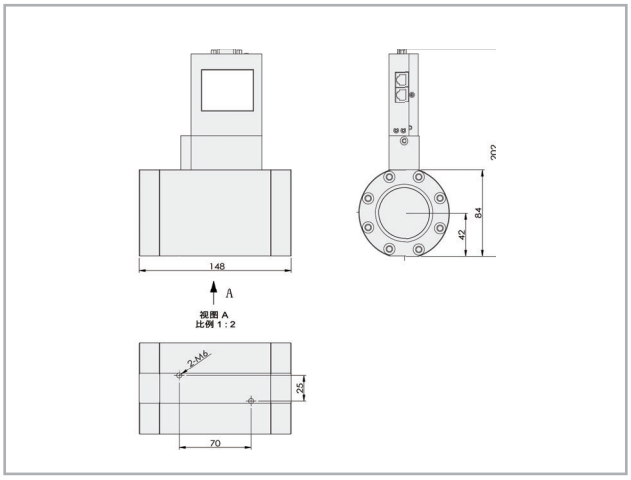

▲ACU20FD-HM mass flow meter（huge range）

Gas flow conversion coefficient table

Gas	Code	Specific heat (Cal/g ℃)	Density (Cal/g ℃)	Conversion coefficient
Air	008	0.240	1.2930	1.006
Ar	004	0.1250	1.7837	1.415
AsH3	03	0.1168	3.4780	0.673
BBr3	079	0.0647	11.1800	0.378
BCl3	070	0.1217	5.2270	0.430
BF3	048	0.1779	3.0250	0.508
B2H6	058	0.5020	1.2350	0.441
CCl4	101	0.1297	6.8600	0.307
CF4	063	0.1659	3.9636	0.420
CH4	028	0.5318	0.7150	0.719
C2H2	042	0.4049	1.1620	0.581
C2H4	038	0.3658	1.2510	0.598
C2H6	054	0.4241	1.3420	0.481
C3H4	068	0.3633	1.7870	0.421
C3H6	069	0.3659	1.8770	0.398
C3H8	089	0.3990	1.9670	0.348
C4H6	093	0.3515	2.4130	0.322
C4H8	104	0.3723	2.5030	0.294
C4H10	111	0.4130	2.5930	0.255
C5H12	240	0.3916	3.2190	0.217
CH3OH	76	0.3277	1.4300	0.584
C2H6O	136	0.3398	2.0550	0.392
C2H3Cl3	112	0.1654	5.9500	0.278
CO	009	0.2488	1.2500	1.000
CO2	025	0.2017	1.9640	0.737
C2N2	059	0.2608	2.3220	0.452
Cl2	019	0.1145	3.1630	0.858
D2	014	1.7325	0.1798	0.998
F2	018	0.1970	1.6950	0.931
GeCl4	113	0.1072	9.5650	0.267
GeH4	043	0.1405	3.4180	0.569
H2	007	3.4224	0.0899	1.010
HBr	010	0.0861	3.6100	1.000
HCl	011	0.1911	1.6270	1.000
HF	012	0.3482	0.8930	1.000
HI	017	0.0545	5.7070	0.999
H2S	022	0.2278	1.5200	0.844
He	001	1.2418	0.1786	1.415
Kr	005	0.0593	3.7390	1.415
N2	013	0.2468	1.2500	1.000
Ne	002	0.2464	0.9000	1.415
NH3	029	0.5005	0.7600	0.719
NO	016	0.2378	1.3390	0.976
NO2	026	0.1923	2.0520	0.741
N2O	027	0.2098	1.9640	0.709
O2	015	0.2196	1.4270	0.992
PCl3	193	0.1247	6.1270	0.358
PH3	031	0.2610	1.5170	0.691
PF5	143	0.1611	5.6200	0.302
POCl3	102	0.1324	6.8450	0.302
SiCl4	108	0.1270	7.5847	0.284
SiF4	088	0.1692	4.6430	0.348
SiH4	039	0.3189	1.4330	0.599
SiH2Cl2	067	0.1472	4.5060	0.412
SiHCl3	147	0.1332	6.0430	0.340
SF6	110	0.1588	6.5160	0.264
SO2	032	0.1489	2.8580	0.687
TiCl4	114	0.1572	8.4650	0.206
WF6	121	0.0956	13.2900	0.215
Xe	006	0.0397	5.8580	1.415