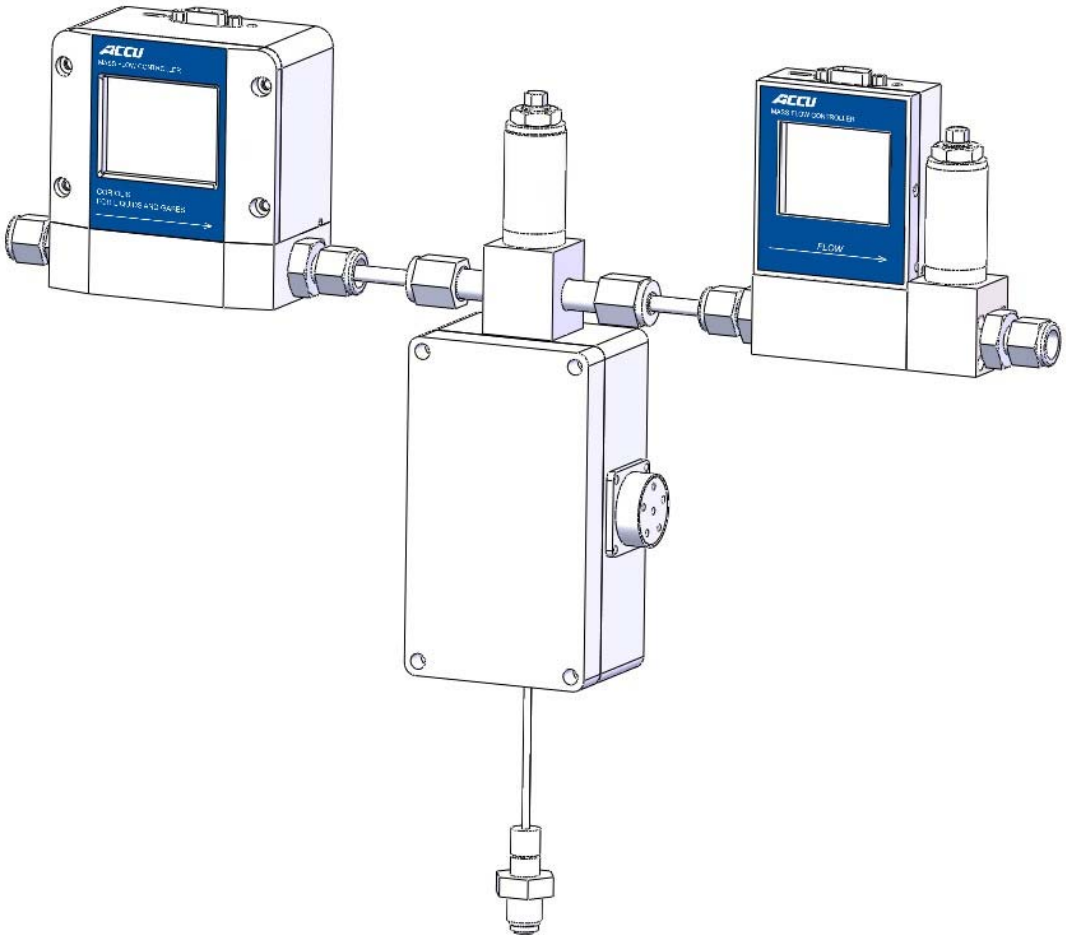

ACCU controllable gas-liquid evaporation system

Solutions for steam flow control

Solutions for Vapour Flow Control

北京精量科技有限公司
Beijing Accu-Flow Technology Co., Ltd.

1 Company Introduction

ACCU (Beijing Precision Technology Co., Ltd.) is a high-tech enterprise, focusing on the development of thermal principle, differential pressure laminar flow principle, Coriolis principle mass flow controller/meter, and pressure controller. The company's products can directly measure the mass flow of gas, liquid and supercritical media, with a minimum range of 20 g/h for liquid and a maximum range of 10000L/min for gas, which is suitable for laboratories and complex industrial environments. At the same time, ACCU has rich practical experience in flow control systems and solutions, serving the chemical, semiconductor, solar and other industries.

2 System Introduction

In many manufacturing processes, where it is desired to mix two or more components together, evaporation of the liquid in the carrier gas is generally achieved using conventional foaming systems. This method, for low vapor pressure liquid processing capacity is not enough, and can not be mixed according to the vapor pressure evaporation in real time. The ACCU gas-liquid mixed evaporation system overcomes these problems and realizes fast, accurate and efficient mixed evaporation control.

3 system composition

The ACCU gas-liquid mixed evaporation system consists of 5 parts: a liquid flow controller (used to control the flow of the liquid source), one or more gas mass flow controllers (used to control the flow of the carrier gas), and a temperature adjustable Mixing evaporator (used for liquid vaporization); An optional flow temperature display controller (used to set the flow and temperature), an optional post-vaporization dilution gas flow controller (for dilution of the produced steam).

3.1 A typical CEM system is shown on the right. The 3-channel display controller is connected and independently controls the liquid flow, gas flow, and evaporation temperature

3.2 PLC and DCS system can be used instead of display control instrument, through MODBUS or DEVICENET and other protocols to achieve centralized control.

3.3 One or more carrier gas flow controllers can be added to realize multi-component carrier gas injection.

4 Steam outlet, can increase the three, acce ss a gas

A mass flow controller to dilute the produced steam.

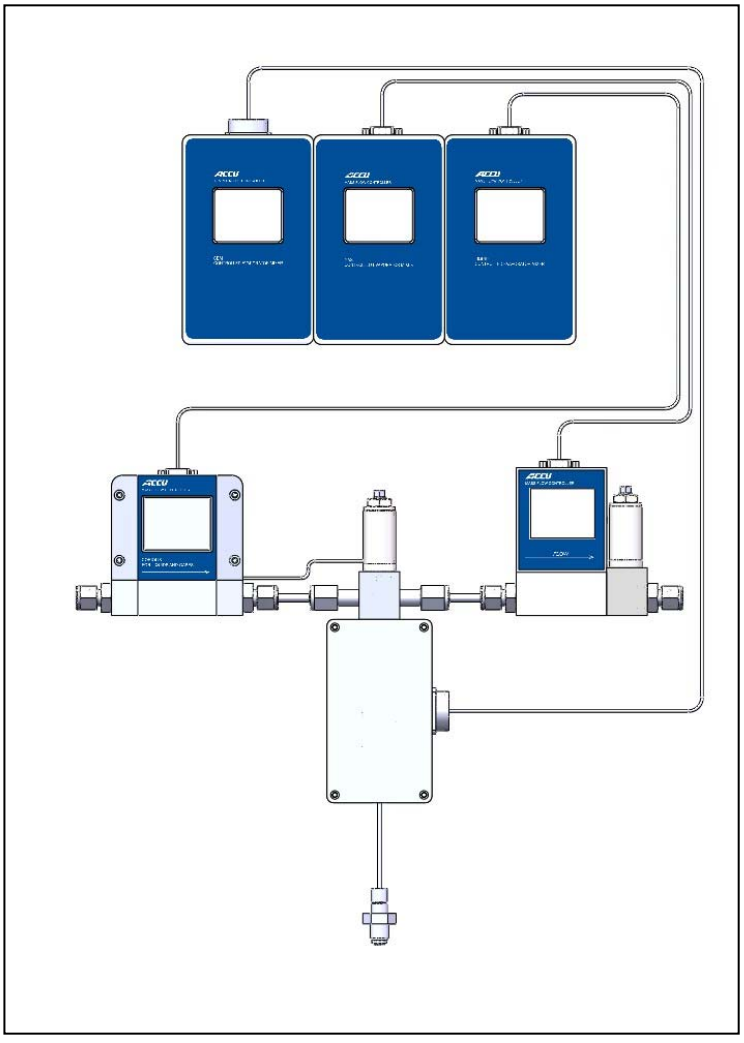

Typical CEM System

4 Technical parameters

4.1 Liquid mass flow meter

Model	ACU20FE-LM
Range	0.02 ~ 50kg/h
control range	Span ratio 100:1
Accuracy	gas: ±0.5.0%F.S、liquid±0.25.0%F.S
Digital quantity	MODBUS(RS232/485)、PROFIBUS、DEVICENET protocol
Analog quantity	0 ~ 5V、4-20mA、1 ~ 5V
Power supply	24VDC
Base material	stainless steel
Connector	φ6, φ8, φ10, φ12, Flange mounting



Liquid mass flow meter

4.2 gas mass flow controller

Mode'l	ACU20FD-LC
Range	2SCCM ~ 30SLM
Control range	Span ratio50:1
Accuracy	±0.5%F.S
digital quantity	MODBUS(RS232/485)、PROFIBUS、DEVICENET protocol
Analog quantity	0 ~ 5V、4-20mA、1 ~ 5V
Power supply	24VDC
base naterial	stainless steel
Connector	φ3, φ6, 1/8", 1/4"



gas mass flow controller

4.3 temperature controlled hybrid evaporator

Model	ACU20CEM
Maximum amount of vaporization	120g/h liquid
Pressure rating	10MPa
Maximum temperature	180℃
Connector	1/8,1/4 ,1/2VCR or ferrule



controllable mixed evaporator

4.4 Flow/temperature display controller

Model	ACU20CEM
Power supply	220V
Analog quantity	0-5V or 4-20mA
digital quantity	MODBUS(RS232/485)、PROFIBUS、DEVICENET protocol
Display Type	LCD with touch



Flow/temperature display controller

六 Application

1 Single carrier gas, no dilution

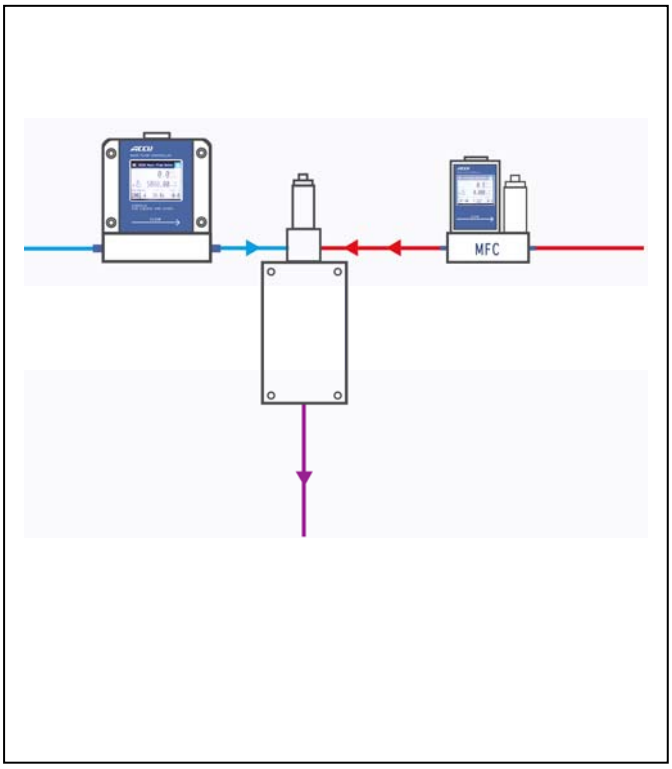

2 Single carrier gas, with dilution

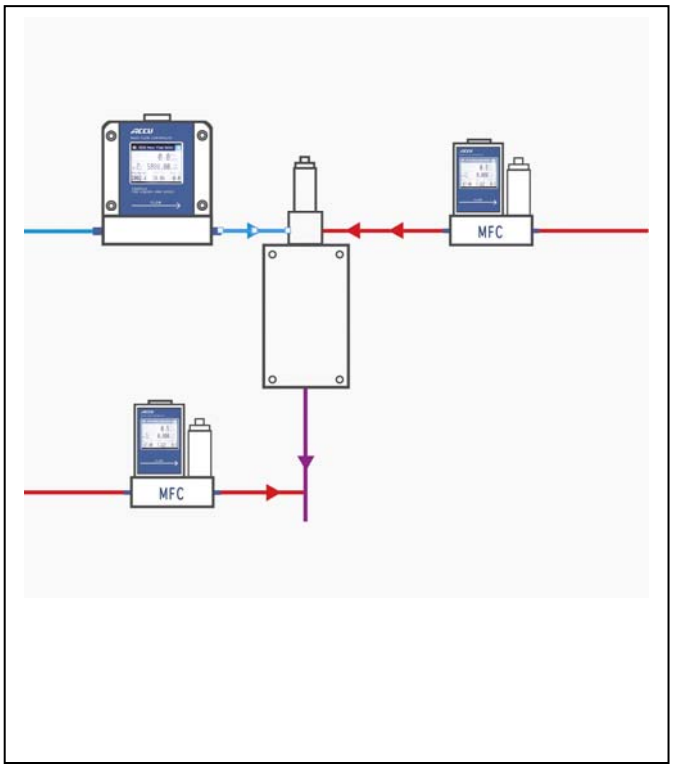

3 Dual carrier gas, no dilution

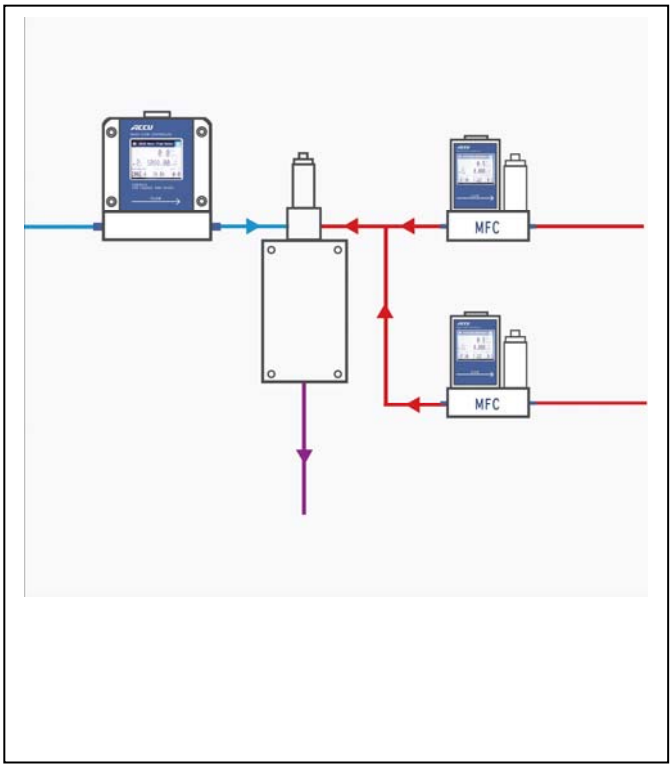

4 Dual carrier gas, with dilution

